NOTES:

1. THIS DRAWING IS TO BE USED AS A GUIDE ONLY. PLEASE REFER TO THE TWIN DISC INSTALLATION MANUAL FOR INSTALLING THE DRIVE AND CYLINDERS.
2. TRANSOM ANGLE FOR ASD UNITS TO BE 7 DEGREES TO VERTICAL, PLUS OR MINUS 1 DEGREE, AS SHOWN IN THE SIDE VIEW.
3. BACKING PLATES OF SAME APPROXIMATE DIMENSIONS AS SHOWN FOR EQUIPMENT FOOTPRINT ARE SUPPLIED. ADEQUATE CLEARANCE INSIDE VESSEL TRANSOM SHOULD BE PROVIDED.
4. DRILL ALL HOLES PERPENDICULAR TO TRANSOM.

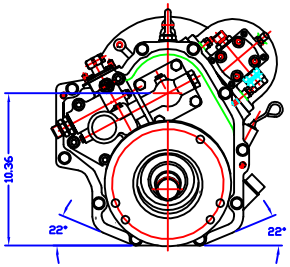

TRANSMISSION REAR VIEW

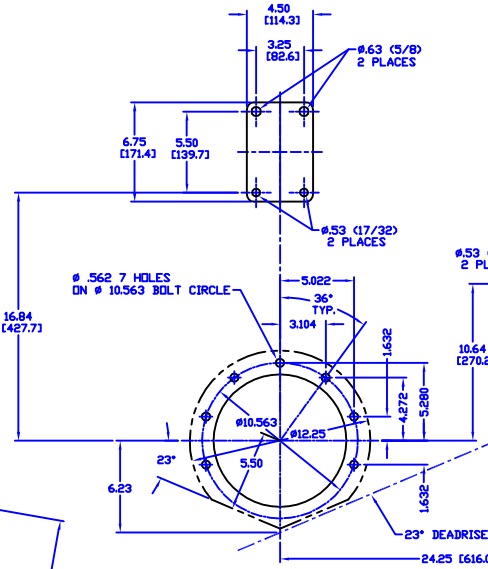

END VIEW
(DIMENSIONS ARE PARALLEL WITH TRANSOM)
DRILLED HOLE CO-ORDINATES

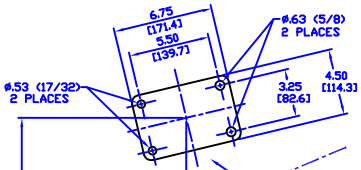

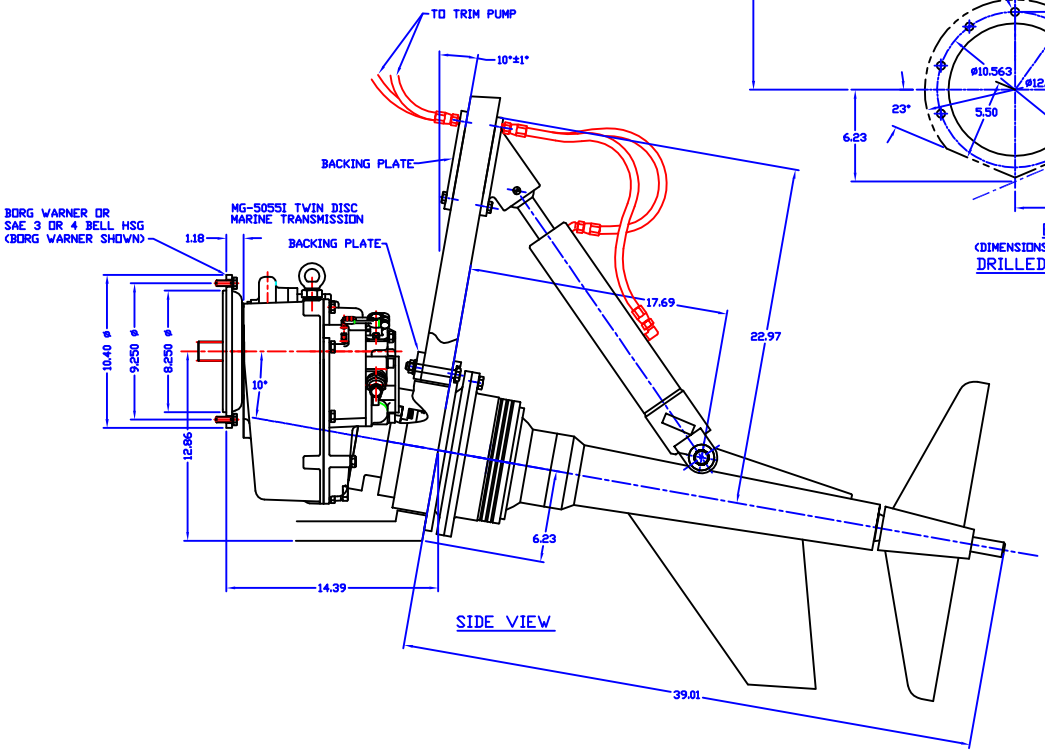

SIDE VIEW

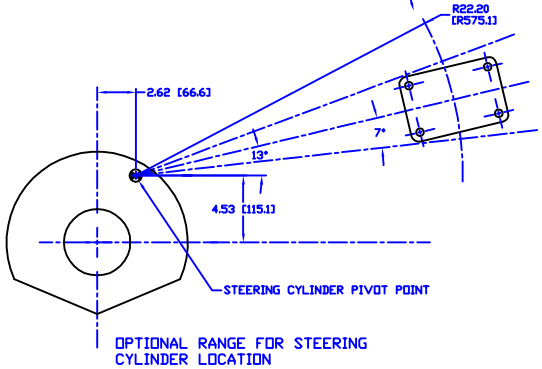

OPTIONAL RANGE FOR STEERING CYLINDER LOCATION

| | | |